Powell

Making Chemical Processes Better™

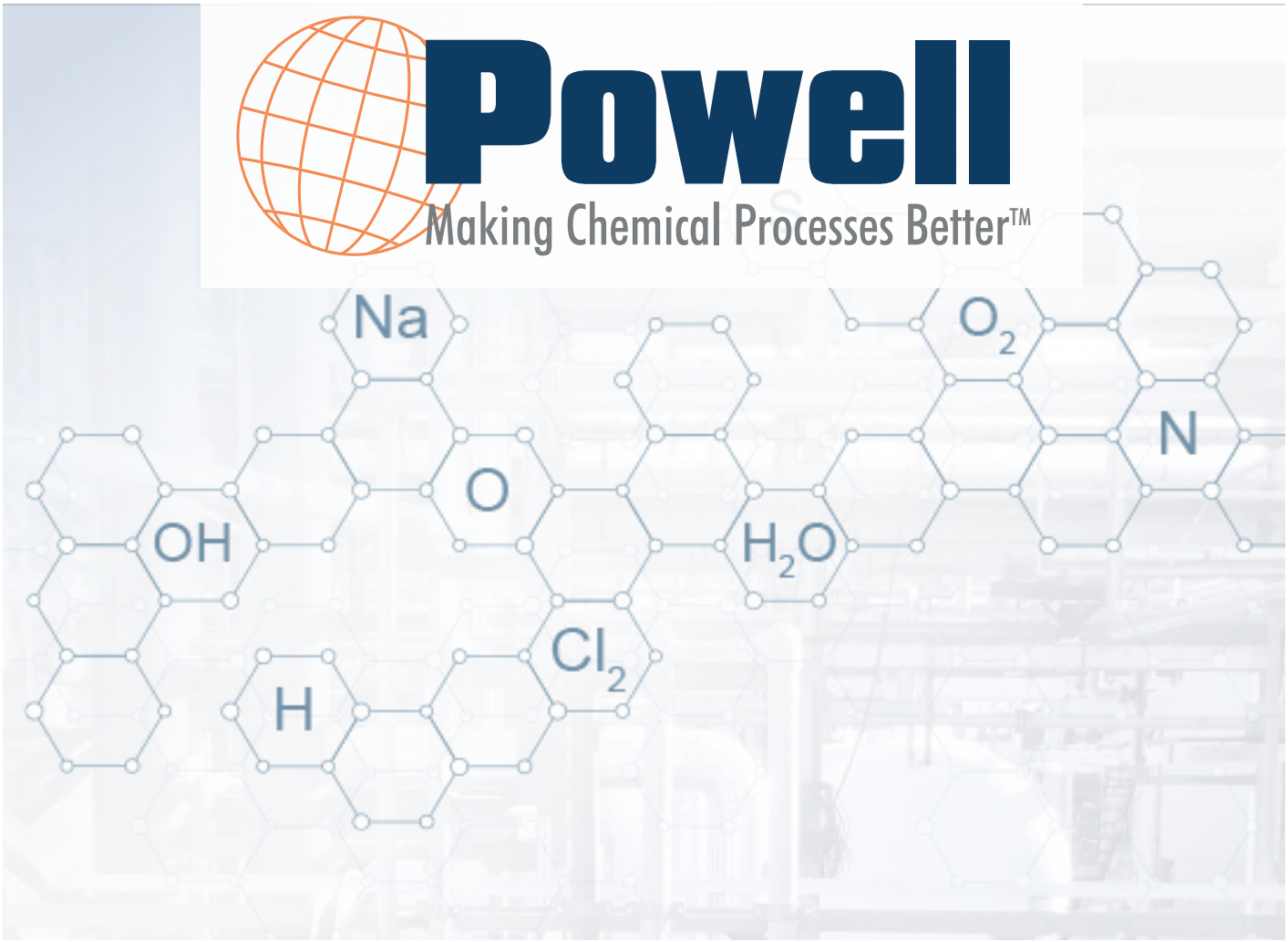

THE CONTROL OF BLEACH MANUFACTURE BY OXIDATION POTENTIAL

D.J. PYE

GREAT WESTERN DIVISION, THE DOW CHEMICAL COMPANY, PITTSBURG, CALIFORNIA

Made in United States of America

Reprinted from Journal of the Electrochemical Society, Vol. 97, No. 8, August 1950.

740 E. MONROE ROAD, ST. LOUIS, MI 48880

989.681.2158 / 888.800.2310

WWW.POWELLFAB.COM

Abstract

The reaction of chlorine and caustic soda used in the manufacture of sodium hypochlorite bleach liquors is usually controlled by the manual titration, but may be better controlled by oxidation potential or pH methods. The oxidation potential method is preferred for reasons of simplicity and accuracy. Proper control results in a product of maximum stability, improved bleaching speed, and more efficient use of raw materials. Curves are presented showing the correlation of alkalinity and oxidation potential as measured by platinum-calomel and platinum-silver electrode pairs. Data on the effect of oxidation potential on stability and bleaching speed are also shown. An automatically controlled continuous process for manufacture on this basis is suggested.

Introduction

The extensive manufacture of sodium hypochlorite bleach liquors for laundry, household, and industrial uses involves the relatively simple reaction in solution:

$$2\ NaOH + Cl_2 \rightarrow NaOCl + NaCl + H_2O\ (I)$$

The reaction is usually carried out in agitated glass-lined or rubber-lined tanks as a batch process. Gaseous or liquid chlorine is sparged into dilute caustic soda of such concentration as to yield the desired bleach strength at the end point. Although most of the material is marketed as 5% NaOCl for household use, higher concentrations of 10% and 16% bleach are prepared for laundry and other commercial uses where long-term stability is not a problem.

While the purification of the caustic solution to remove decomposition catalysts and other impurities is quite well controlled by carbon filtration and water softening prior to chlorination, the control of the bleach batch end point is critical and requires appreciable attention by the operator. This end point is determined by destroying the hypochlorite in a grab sample with neutral hydrogen peroxide and titrating the excess alkalinity with standard acid. The end point is quite critical in that a product with excess alkalinity greater than the minimum amount required for stability is wasteful of caustic soda, undesirably alkaline, and slow in bleaching speed. On the other hand, over-chlorinated materials is seriously unstable in an autocatalytic manner which can result in a boil over releasing large quantities of chlorine into the atmosphere. Just beyond the end point the pH decreases, producing HOCl, and the reaction takes place forming more acid, thus further reducing the pH until Cl_2 is liberated.

$$2HOCl + NaOCl \rightarrow NaClO_3 + 2HCl\ (II)$$

The simple nature of the desired reaction makes the process ideally suited to electrometric control by either pH or oxidation potential methods. The neutralization of the caustic with chlorine exhibits a marked pH inflection point at the reaction end point which can itself be used as a control system. For practical reason, however, the control based on oxidation potential is to be preferred.

The potential of a platinum electrode in alkaline chlorine solutions is given by the equation

$$E = E^\circ - \left(\frac{0.0591}{2}\right) log \left[\frac{(OCl^-)\ (H^+)^2}{Cl^-}\right]$$

where E° is the standard oxidation potential for the reaction. Since the electrode potential is primarily a function of the hydrogen ion concentration, a sharp inflection is noted at the reaction end point similar to that obtained by pH measurements.

The substitution of continuous electrometric control for intermittent manual testing then makes possible the design of a fully automatic continuous reactor control system since the measuring instrument can be made to control the chlorine flow.

Experimental Methods & Results

Electrode Construction

In order to correlate the oxidation potential of the hypochlorite solutions with excess alkalinity, emf measurements were made on a box-type portable 1.1 volt potentiometer using a platinum-saturated calomel cell electrode pair. For laboratory experiments, the electrode pair consisted of a 2 cm^2 piece of platinum foil and a standard sleeve type calomei cell.

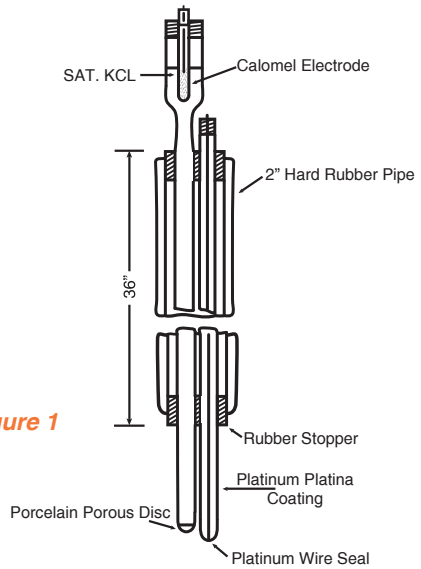

Figure 1

For control of commercial batches, a more rugged assembly was constructed as shown in Figure 1. The measuring electrode was formed by firing several layers of platinum platina on the end of the glass tube having a platinum wire sealed in its end. The porous disc liquid junction of the calomel cell was found less troublesome than the usual loose sleeve.

Recently it has been found that a simple silver foil or rod electrode may be substituted for the calomel cell as a reference electrode, thus avoiding the annoyance of maintaining a KCl solution level in the cell.

Reaction Control by Oxidation Potential

The oxidation potential was correlated with alkalinity in the laboratory by chlorinating 5-gallon quantities of 2%, 5%, and 16% bleach having high excess alkalinity. The decrease in alkalinity was followed by titration with standard acid after destroying the hypochlorite with neutral H_2O_2. The relationship between oxidation potential and excess alkalinity near the end point is shown in Figure 2.

The true electrometric end point falls short of the zero alkalinity ordinate by the amount of alkali attributed to the hydrolysis of the basic NaOCl. The curves are very steep at the true end point and exhibit a relatively large voltage

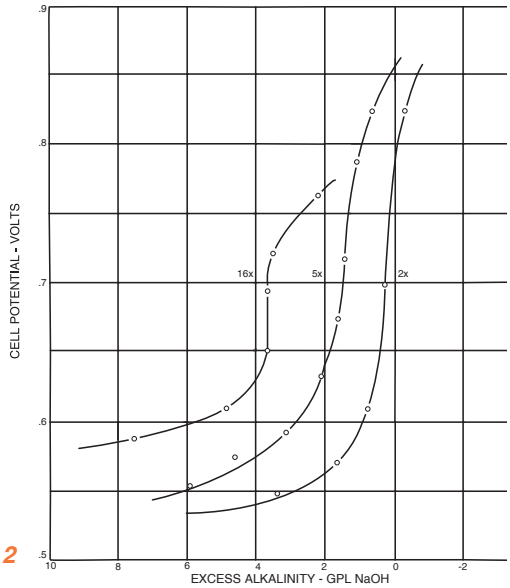

Figure 2

shift. For this reason, it is almost impossible to stop the reaction at the exact inflection point and it was found more practical to slow the chlorine flow at about 0.50 volt and stop the reaction at 0.62 volt. Although this end point has been found to be sufficiently stable for production purposes, it has been observed that more stable end point is obtained if the reaction is allowed to go slightly over and then back to the control point with caustic.

Figure 3 shows the curve obtained using the platinum-silver electrode pair and includes the potential of the silver electrode vs. a normal calomel electrode as a measure of the constancy of silver as a reference electrode. While such a variation would be unsatisfactory for theoretical work, it is quite reproducible and is satisfactory for production purposes.

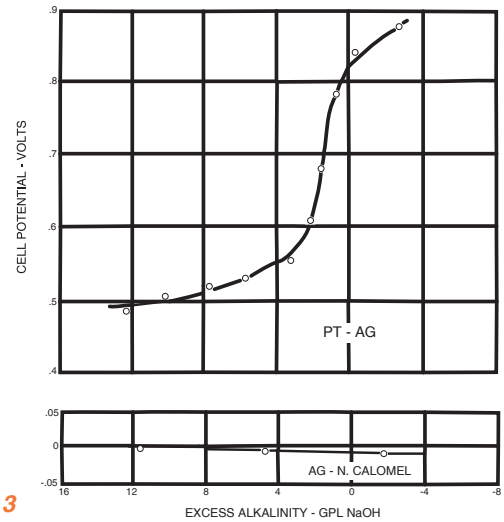

Figure 3

Large-scale production batches have been satisfactorily controlled by this method on an experimental basis giving results as predicted from the laboratory experiments.

Reaction Control by pH Methods

The reaction may also be controlled by pH methods since the pH changes rapidly at the reaction end point giving a curve similar in shape to the emf curves. Theoretically, then, pH control would be as useful as oxidation potential control but, from the practical standpoint, oxidation potential control has several advantages.

- Oxidation potential measurements require only simple low impedance measuring devices, whereas pH control by glass electrode requires complex high impedance electronic amplifiers.
- Glass electrodes, being subject to asymmetry potential errors, require occasional buffer checks to maintain accuracy.
- A standard glass electrode is subject to sodium ion errors at high pH values in the presence of high sodium ion concentrations which tend to decrease its sensitivity. Special low sodium ion error electrodes are not satisfactory due to an inherently slow speed of response.
- Oxidation potential electrodes are instantaneous in response so that the tendency to over-chlorinate at the sensitive end point is minimized.

From the standpoint of practical plant operation the oxidation potential control is to be preferred if for no other reason than that the instrumentation is lower in cost.

Stability of Hypochlorite Solutions

The stability of 16% bleach solutions as a function of oxidation potential and excess alkalinity is show in Fig. 4.

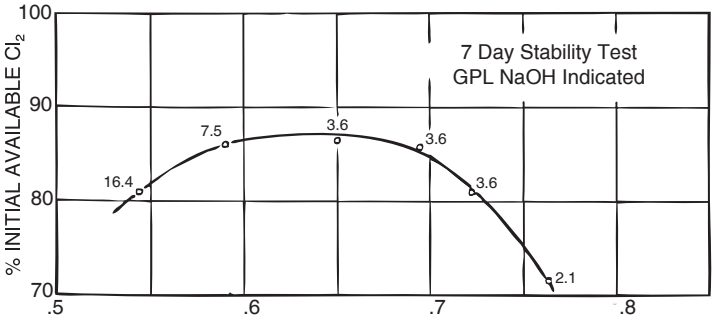

Figure 4

It will be noted that although the effect is not pronounced, the solution is actually more stable at the true end point than in more alkaline solutions. It is also apparent that the oxidation potential near the end point is a much more sensitive measure of the stability than titration values since the three samples titrating 3.6g/l NaOH showed marked differences in potential and stability. Thus these successive very small increments of chlorine added to the bleach caused a marked increase in oxidation potential, while the change in alkalinity was so slight as to fall within the limits of error of the titration method. For this reason, the product may be finished close to the end point with much more confidence using electrometric control methods.

Close finishing practice, providing it can be done with confidence, is desirable not only from the standpoint of increasing caustic efficiency but also for its effect on the product quality.

Effect of Oxidation Potential on Rate of Bleach

Since the amount of excess alkalinity allowed to remain in the bleach liquor will affect the pH and the oxidation potential of the diluted bleaching solution, it is important to consider its effect on the rate of bleaching of colored compounds. In the course of some recent work concerning the bleaching of stains from walnut shells, tests were made on the effect of alkalinity and oxidation potential on the rate of de-colorization on an air-oxidized pyrogallol solution with 2% hypochlorite. Fig. 5 shows the rate of color change of the dye solution at three different oxidation potentials obtained by adjusting the potential with chlorine prior to adding the dye. Pyrogallol is a moderately resistant color and its pronounced response to increased oxidation potential may be considered typical. The potential of 0.62 volts indicates a stable bleach that could be produced under proper control in either a batch or continuous process.

Continuous Automatic Chlorination Control

While the electrometric control of a batch chlorination is a considerable improvement over titration methods, the maximum savings in operating labor and increase in chlorination efficiency will be realized with a continuous process.

Although, to the author's knowledge, oxidation potential control has not yet been used as a basis for a continuous process, experience with batch processes permit several statements to be made concerning the design of such a system. Assuming that a stable bleach solution of minimum alkalinity is to be manufactured, the critical end point requires that some attention be given to the instrumentation features.

Transport lag to the electrodes should be avoided so that direct tank immersion electrodes should be provided. Trouble may be encountered with high local chlorine concentrations unless good agitation is provided. This is particularly true if liquid chlorine feed is anticipated.

The demands on the automatic chlorine control from the electrodes should be minimized by providing a flow controller for the caustic feed. A better system which has proved adequate for similarly critical systems is to provide a flow controller for the caustic, and a ratio controller for the chlorine operated from the caustic control, the set point of which is controlled by the emf recorder. Such a system would provide a highly uniform product even under adverse conditions.

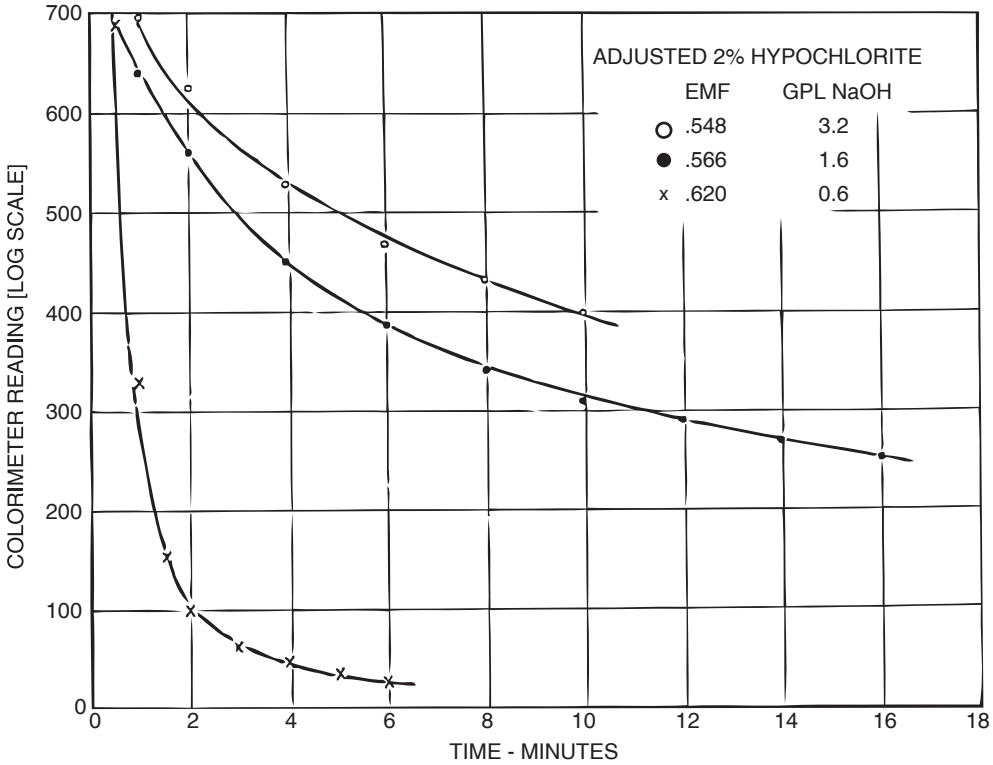

Figure 5

Conclusions

The experiments on laboratory and plant scale on the control of the hypochlorite reaction by means of oxidation potential lead to the conclusions that electrometric control is reliable, efficient, and practical. By this means, a product can be manufactured which has maximum stability and optimum bleaching speed under conditions of maximum caustic utilization. The method will reduce the time required to finish a batch of bleach by elimination of repeated titration tests and thus reduce operating labor and increase the daily reactor capacity.

The control method may be adapted to permit a fully automatic continuous reaction system which would still further reduce the cost of manufacture.

A discussion of this paper will appear in a Discussion Section, to be published in the June 1951 issue of the JOURNAL.

Powell ORP Electrodes Based on D.J. Pye's Recommendations

Our ORP Electrodes are built according to the 1970 patented design by J.E. Ayers. This design was developed following the recommendations published in this article. For more information about our ORP Electrodes, contact us today or visit our website at www.powellfab.com.

Manuscript received February 10, 1950. This paper prepared for delivery before the Cleveland Meeting, April 19 to 22, 1950.